MASTER COPY

Glow-worm

206494/7/87

Installation and Servicing Instructions

To be left adjacent to the gas meter

SPACE SAVER 60 Mk II
Open Flue Boiler

With Honeywell Control

G.C. Number 41 313 08

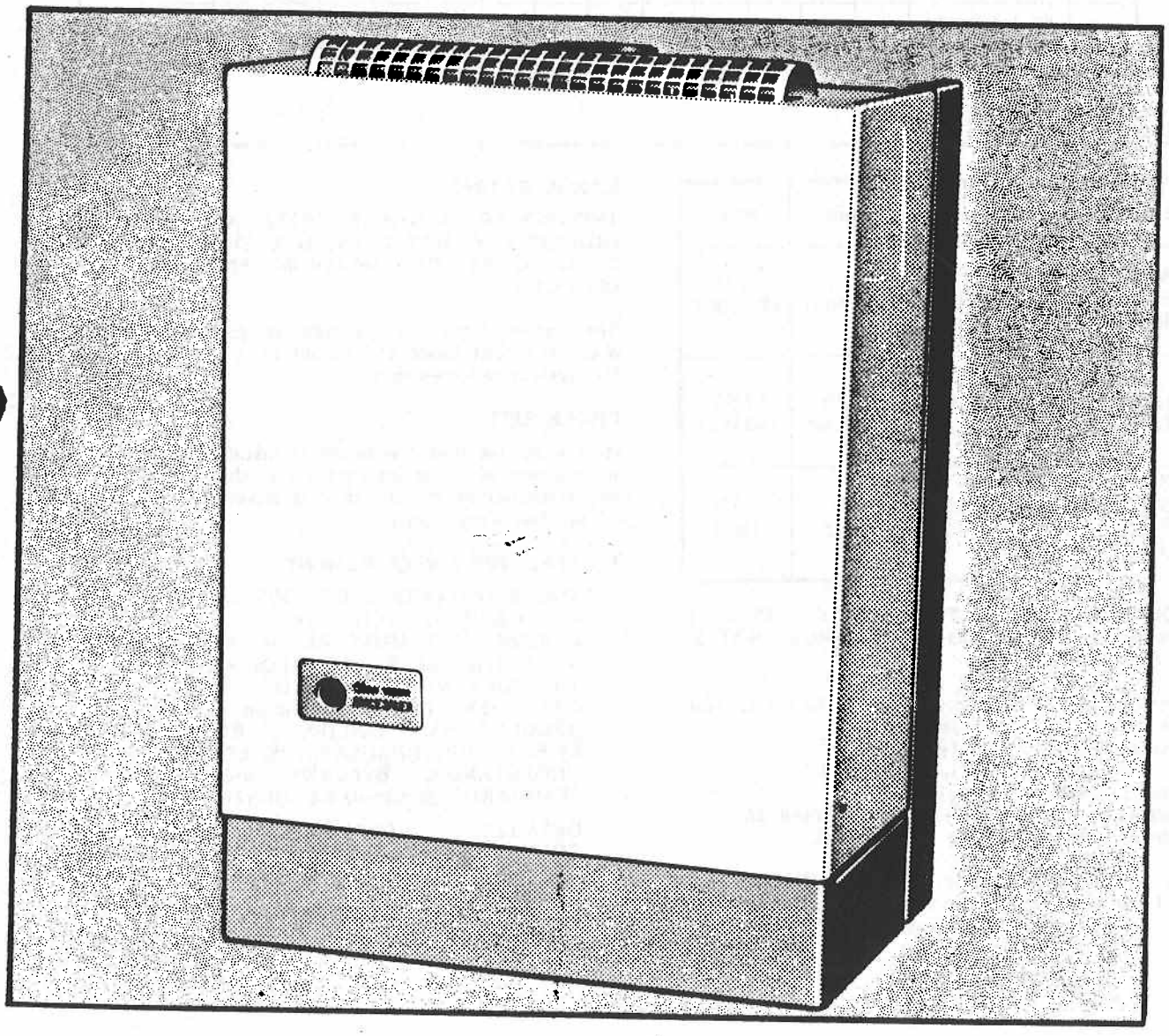

1 GENERAL

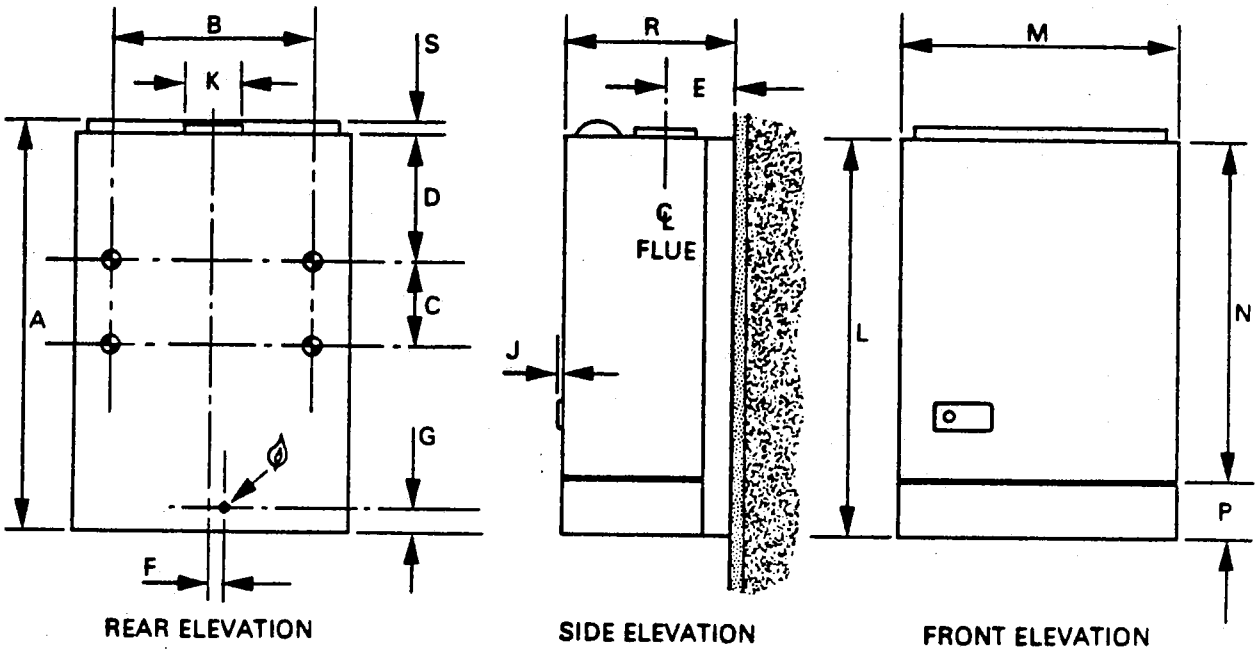

	A	B	C	D	E	F	G		J	K	L	M	N	P	R	S
mm	812	392	168	253	151	54	49		3	115	789	551	679	110	347 approx	23
(in)	32	15 7/16	6 5/8	9 15/16	5 15/16	2 1/8	1 15/16		1/8	4 1/2	31 1/8	21 11/16	26 3/4	4 3/8	13 11/16	7/8

WATER CONNECTIONS

GAS CONNECTION

555

Diagram 1

RANGE RATING		min	max
NOMINAL HEAT INPUT	kW (Btu/h)	17.7 (60,400)	23.13 (78,900)
HEAT OUTPUT	kW (Btu/h)	13.19 (45,000)	17.59 (60,000)
BURNER SETTING PRESSURE (HOT)	mbar (in. w.g.)	7.5 (3,0)	13.0 (5,2)

556

IMPORTANT NOTICE: The Space Saver 60 Mk II is for use on natural gas only and MUST NOT be used on any other gas.

Approx. weight of complete boiler : 70.5kg (155lb)
Water content : 7.5 litre (1.65 gal.)
Gas connection : Rc½, (½in. BSPT).
Water connections : Rcl, (1in. BSPT).
Injector : 3.8mm dia. hole
Electrical supply : 240V ∿ 50Hz, fused 3A
Burner : Aeromatic type 7/5 2008 LR

When installing or servicing this appliance, care should be taken when handling the edges of sheet metal parts, to avoid any possibility of injury.

RANGE RATING

THIS BOILER IS RANGE RATED AND MAY BE ADJUSTED TO SUIT INDIVIDUAL SYSTEMS. THE TABLE GIVES THE MAXIMUM AND MINIMUM OUTPUTS.

The boiler input as supplied is pre-set to the maximum heat input and should be adjusted to suit the system requirements.

PROCEDURE

It is essential that the boiler is installed strictly in accordance with the instructions in this booklet and the attention of the installer is drawn in particular to the following points.

1.1 STATUTORY REQUIREMENTS

THE INSTALLATION OF THIS BOILER MUST BE CARRIED OUT BY A COMPETENT PERSON AND MUST BE IN ACCORDANCE WITH THE RELEVANT REQUIREMENTS OF THE CURRENT ISSUE OF THE:
GAS SAFETY (Installation & Use) REGULATIONS, BUILDING REGULATIONS, I.E.E. WIRING REGULATIONS, LOCAL WATER UNDERTAKING BYELAWS and BUILDING STANDARDS (Scotland) REGULATIONS.

DETAILED RECOMMENDATIONS ARE CONTAINED IN THE CURRENT ISSUE OF THE THE FOLLOWING BRITISH STANDARD CODES OF PRACTICE:
CP331 PART 3, BS6798, BS5440 PART 1, BS5440 PART 2, BS5449 PART 1 and BS5546.

1.2 GAS SUPPLY

The gas installation should be fitted in accordance with the current issue of CP331 Part 3. The supply from the meter to the boiler must be of adequate size. Smaller size tube than the boiler inlet gas connection should not be used. The complete installation must be tested for soundness as described in the above code.

1.3 ELECTRICAL

The electrical installation should be carried out by a competent electrician. All external components shall be of the approved type and shall be connected in accordance with the current issue of the I.E.E. Wiring Regulations and any local regulations which apply. The boiler must be earthed and connections to the mains supply should preferably be through an unswitched shuttered socket outlet and 3 amp fused 3 pin plug. Alternatively, a 3 amp fused double pole isolating switch or 3 amp fused spur box with minimum double pole contact separation of 3mm may be used, serving only the boiler. Heat resistant flexible cable of 0.75mm^2, (24/0.20mm), to BS6500 table 12 must be used for all connections to the control drawer.

1.4 BOILER LOCATION

The boiler position should be such that the following minimum clearances are provided, (shown in diagram 3).

Right & left hand side of boiler - 6mm (1/4in).
Top of boiler casing - 108mm (4 1/4in).
Below boiler to fixture - 100mm (4in)
Below boiler to floor - 915mm (36in)
Front clearance - 330mm (13in).
(From a permanent surface).

THE BOILER **MUST** NOT BE INSTALLED IN A BEDROOM, BEDSITTING ROOM, OR ROOM CONTAINING A BATH OR SHOWER.

OPEN FLUE BOILERS **MUST NOT** BE INSTALLED IN A GARAGE.

THE BOILER IS NOT WEATHERPROOFED, THEREFORE IS **NOT** SUITABLE FOR OUTSIDE INSTALLATION.

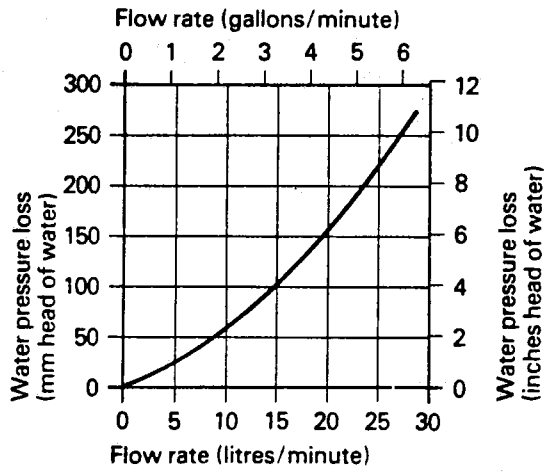

470 PRESSURE LOSS OF BOILER

Diagram 2

2.1 SYSTEM

This boiler shall only be connected to a cistern water supply, with a head not exceeding 27 metres, (90ft), or less than 1 metre, (3ft 3in.) and having an open vent in the system.

The boiler MUST NOT be connected to a sealed system.

2.2 GRAVITY DOMESTIC HOT WATER

It is recommended that a cylinder thermostat is used to prevent the stored water temperature becoming unnecessarily high when the central heating pump is off.

The domestic flow and return must be 28mm diameter. The installation must comply with the requirements of BS5546.

If the above conditions cannot be accommodated, it is suggested that a fully pumped system is employed.

2.3 FULLY PUMPED CIRCULATION

Where single flow and return is taken from the boiler, a minimum static head of 1 metre must be provided between the bottom of the cold feed tank and centre of waterway.

2.4 PUMP

Normally the pump should be set to give a temperature difference of 11°C, (20°F), across the system. At the appropriate pumped flow rate the resistance through the boiler can be found from the pressure loss graph, diagram 2.

2.5 CYLINDER

For all systems supplying domestic hot water the cylinder must be indirect.

2.6 SAFETY VALVE

If a safety valve is fitted, it should be adjacent to the boiler on the flow. It must not be possible to isolate the safety valve from the boiler by means of any intermediate cock. For further details refer to BS6798.

2.7 DRAINAGE

A drain cock must be provided at the lowest point(s) of the system which will allow the entire system, boiler and hot water cylinder to be drained for maintenance purposes. Drain cocks shall be to BS2879, type 1.

3 FLUE CONNECTION

The integral draught diverter on the Space Saver range of boilers makes the combustion performance independent of conditions in the secondary flue, but in common with other fuels an efficient flue is necessary to ensure a trouble-free installation.

The boiler flue socket is suitable for connection of a 100mm (4in.) nominal diameter flue pipe to BS567. If a flue pipe to BS715 is to be used, an adaptor must be fitted to the socket.

The flue must be in accordance with the relevant recommendations of BS5440 Part 1.

3.1 FLUE SYSTEM GUIDELINES

3.1.1 The flue should be kept as short as possible. Horizontal or very shallow runs of the flue should be avoided since they impede the flow of the combustion products and encourage local cooling.

3.1.2 If there is a choice of flue routes, that which is least likely to cause local or general cooling of the combustion products is to be preferred.

3.1.3 Give maximum possible vertical rise from the boiler, minimum 600mm, before using any elbow bends.

3.1.4 Terminate with an approved terminal, preferably above ridge height, but a least above the eaves of a pitched roof.

3.1.5 A previously used chimney or flue must be swept and any register plate, damper etc. must be removed before the boiler is fitted.

3.2 BOILERS INSTALLED IN A COMPARTMENT

The compartment, whether modified or specially built, should meet the requirements of BS6798 and the following:

3.2.1 Have a half hour fire resistance from internal fire and the inside lining or finishing should be non-combustible or a class 1 finish. The door must have at least the fire resistance of the compartment walls.

3.2.2 For good acoustic insulation, should preferably be built of brick or clinker block plastered on at least one side and supplied with a well-fitting door.

3.2.3 Be of sufficient size to permit access for inspection and servicing of the boiler. It should not be made larger than necessary, in order to avoid the use of the compartment as a storage cupboard.

3.2.4 Be fitted with a door sufficient in size to permit the boiler to be withdrawn from the compartment.

3.2.5 Be fitted with permanent openings for air for combustion and compartment ventilation as shown in the table.

The figures quoted refer to the minimum acceptable **free area** when grilles are fitted to the openings. The high level and low level openings must communicate with the same room or space or must both be on the same wall to outside air.

Where ventilation air to a compartment is taken from a room or space, then the room or space must be fitted with a ventilation opening as specified in 3.3. The compartment vents **must not** communicate with a bedroom, bedsitting room, garage, or room containing a bath or shower.

If the compartment door opens into a bedroom, bedsitting room, garage, or room containing a bath or shower, the door **must** be self-closing and draught proofed.

3.3 BOILER INSTALLED IN A ROOM OR SPACE

A purpose designed ventilation opening must be provided on an outside wall of the building, refer to BS5440 Part 2. This opening may be either:-

3.3.1 Directly into the room or space containing the boiler, or

3.3.2 Into an adjacent room or space which has an internal permanent air vent of the same size to the room containing the boiler. **Do not** ventilate via a bedroom, bedsitting room, garage, or room containing a bath or shower.

3.3.3 If the air vents are fitted to a cavity type wall, the opening through the wall shall be ducted.

3.3.4 When the boiler is installed in a room or internal space already containing other fuel burning appliances then the air supply of such appliances should be taken into account.

3.3.5 **The free air requirement for the Space Saver 60 Mk II is 73cm^2 (11in^2).**

3.4 EXTRACTION FANS

If an extraction fan is fitted in the premises, there is a possibility that if adequate inlet openings are not provided, spillage of products from the boiler flue could occur If ventilators are fitted in accordance with the recommendations in the sections above, the use of extraction fans should not cause down-draught; but where such installations are found a spillage test as detailed in BS5440 Part 1, appendix B must be carried out and any necessary corrective action taken.

COMPARTMENT VENTILATION REQUIREMENTS	HIGH LEVEL VENT AREA		LOW LEVEL VENT AREA	
	cm^2	(in^2)	cm^2	(in^2)
VENTILATION FROM ROOM OR SPACE	208	(32)	416	(63)
VENTILATION FROM OUTSIDE	104	(16)	208	(32)

557

4.1 LOCATION OF PARTS AND CONTENTS OF PACKAGING

PACK 1

Boiler Chassis:- Main Body of Boiler
Outer Case:- Main Case Body
Wall Frame
Burner
Rear side panels
Combustion chamber shield
Fixing Pack (Screws, Wallplugs etc.)
User and Installation Instructions.
Flue baffle plate.

PACK 2

Basic Model:-
Controls Cabinet
Controls Drawer (Basic)
Piezo Unit
Door and Base Assembly (Basic)
Bag of Fixings

4.2 UNPACKING

4.2.1 Remove outer packaging to reveal white outer casing. Remove the two M6 screws which secure the bottom of the outer casing to the chassis.

4.2.2 Slide the white casing about 1 in upwards to disengage it from the chassis, and remove it, gently tilting and easing to avoid damage.

4.2.3 Remove the transit bracket from the bottom rear of casing and discard, taking care not to damage the casing.

4.2.4 Put the casing in a safe place.

5 INSTALLATION

5.1 Refer to diagram 3 for minimum installation distances.

5.2 Remove the two boiler wall frame fixing screws to allow the frame to disengage from chassis of boiler, see diagram 8. Turn the appliance over on it's front, ready for piping up. The outer packaging may be flattened and used to protect the appliance and the floor.

5.3 Mark out the wall surface with the positions for the wall frame fixing screw holes as shown in diagram 3. Drill holes to suit No.12 aluminium wallplugs at the fixing screw positions.

5.4 Fit the wall frame to the inner surface of the wall, using the No.12 aluminium wallplugs and wood screws supplied.

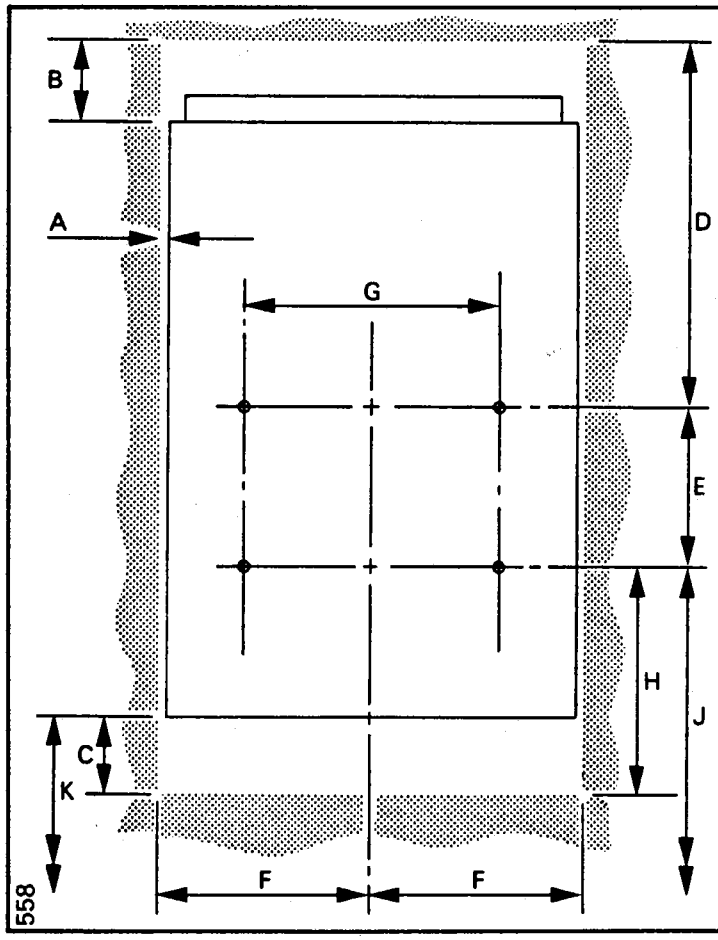

Fixing Hole Positions and Recommended Minimum Clearances from Fixtures and Floor

		mm	in
A	L.H. and R.H. side of casing	6	¼
B	Top of casing to ceiling/fixture	108	4¼
C	Bottom of casing to fixture	100	4
D	Top fixing holes to ceiling	482	19
E	Fixing hole centres	210	8¼
F	℄ to R.H. and L.H. wall/fixture	282	11⅛
G	Fixing hole centres	331	13
H	Bottom fixing holes to fixture	305	12
J	Bottom fixing holes to floor	1120	44
K	Bottom of casing to floor	915	36

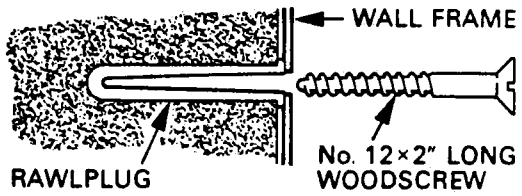

Diagram 3

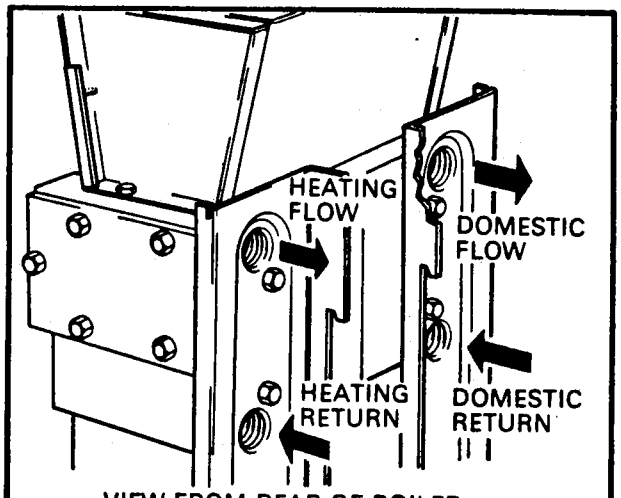

VIEW FROM REAR OF BOILER
Connections for gravity domestic flow and return are fitted to the same side of the boiler.

494 Diagram 4

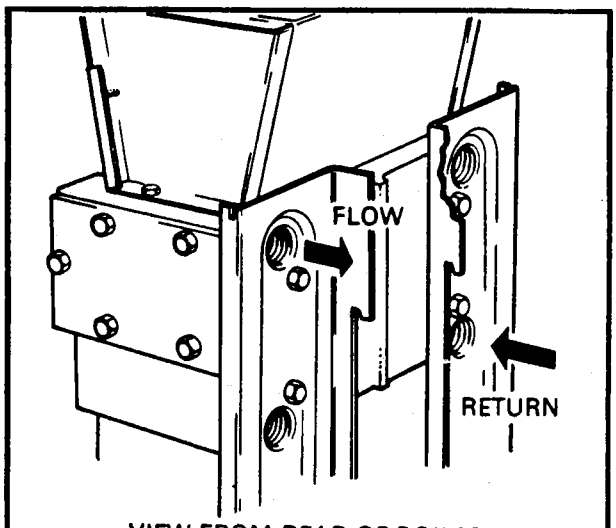

VIEW FROM REAR OF BOILER

495 Diagram 5

5.5 WATER CONNECTIONS (USE ONLY SUITABLE FITTINGS).

Fit the appropriate fittings into the boiler tappings as required, see diagrams 4 and 5.

5.6 GRAVITY DOMESTIC HOT WATER WITH PUMPED HEATING.

It is important that the arrangement illustrated in diagram 4 is adopted when the gravity domestic hot water connections are being prepared. The domestic return pipe must be on the same side as the domestic flow.

The heating flow and return pipes are taken from the other side of the boiler.

5.7 PUMPED HEATING AND HOT WATER

It is important that all connections are made as illustrated in diagram 5. The connections may be fitted on opposite sides to that shown, but always in the same relative positions.

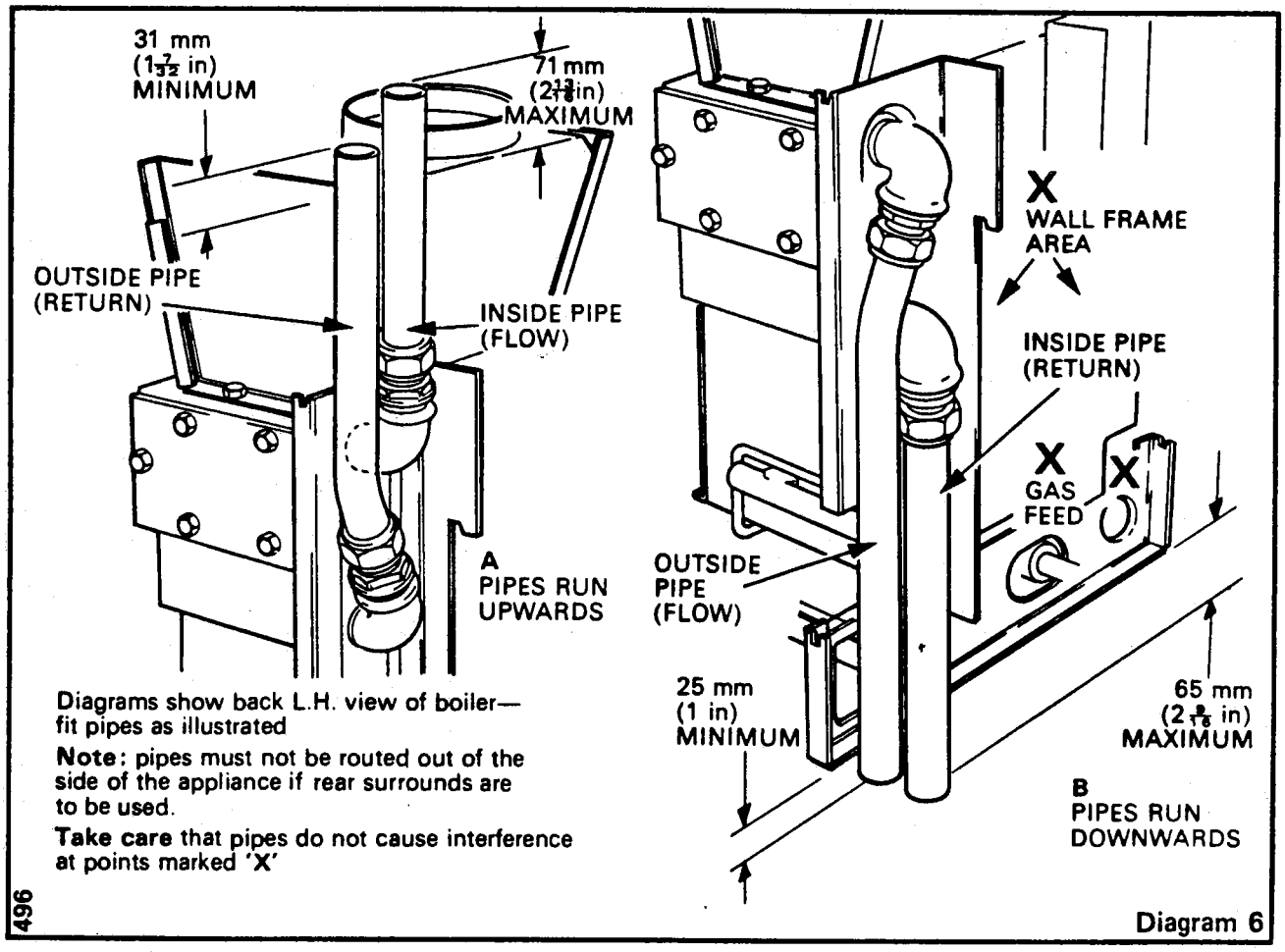

Diagrams show back L.H. view of boiler—fit pipes as illustrated

Note: pipes must not be routed out of the side of the appliance if rear surrounds are to be used.

Take care that pipes do not cause interference at points marked 'X'

496 Diagram 6

5.8 Fit the water pipes with compression fittings to terminate above the top edge of the casing surround support bracket or below the bottom edge of the control bridge, whichever is applicable.

The dimensions shown in diagram 6 will allow the compression fittings to be accommodated when the boiler is fitted with minimum clearances. When a larger clearance is available, these pipe lengths may be adjusted accordingly.

5.9 Lift the boiler and position onto the wall frame so that the tags on the boiler body support members locate on the cross member of the wall frame (see diagram 7). Fasten the boiler to the wall frame using the two self tapping pozidriv screws provided. Access to the screw holes is gained through the combustion chamber (see diagram 8).

5.10 Remove the four screws which retain the flue cleaning door and lift it clear. Fit the stainless steel flueway baffle plate by placing the baffle in position on top of the boiler body. Ensure that the surfaces marked 'TOP' is uppermost and the baffle is correctly seated on the boiler body casting (see diagram 9). Check that the down turned lugs of the baffle fit between the top fins. Replace the flue cleaning door.

5.11 Complete the water connections to the pipes previously fitted, using compression fittings.

5.12 Make the gas connection to the Rc½ union gas cock in the controls area of the boiler.

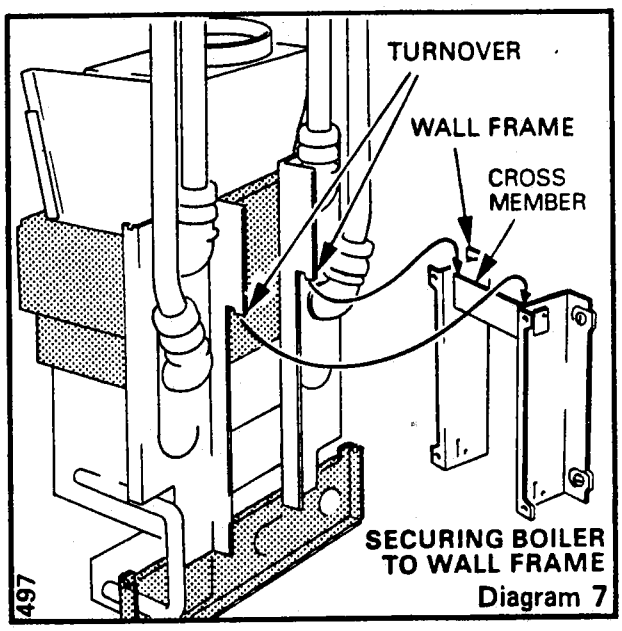

SECURING BOILER TO WALL FRAME
Diagram 7

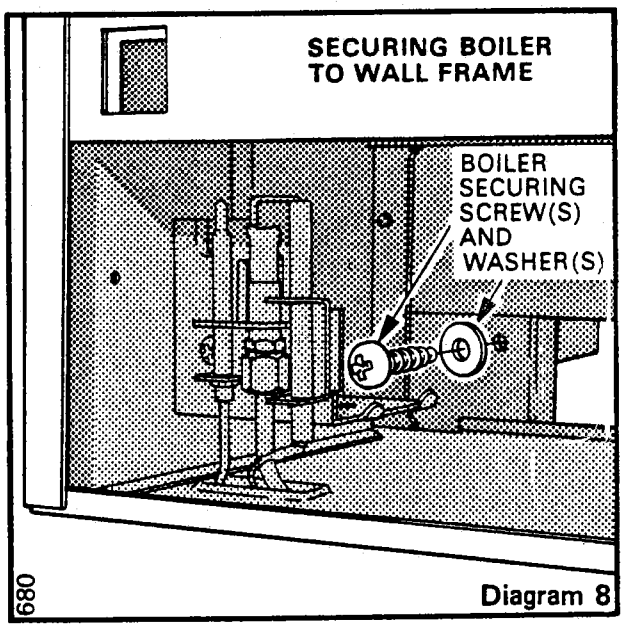

Diagram 8

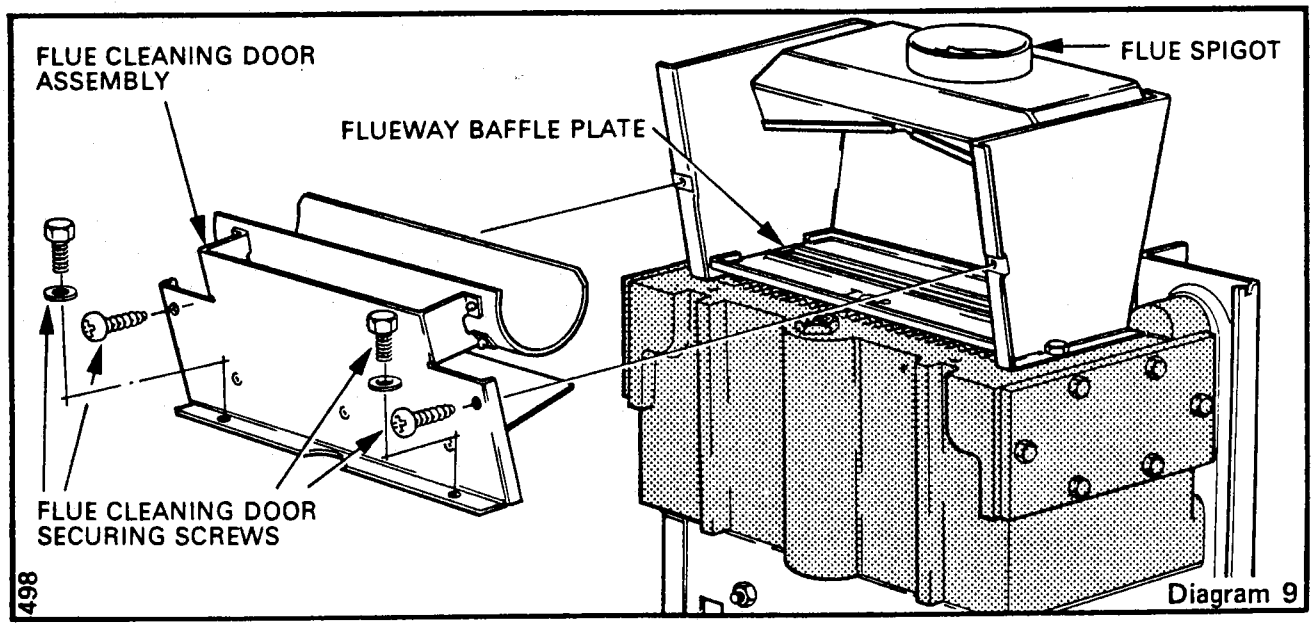

Diagram 9

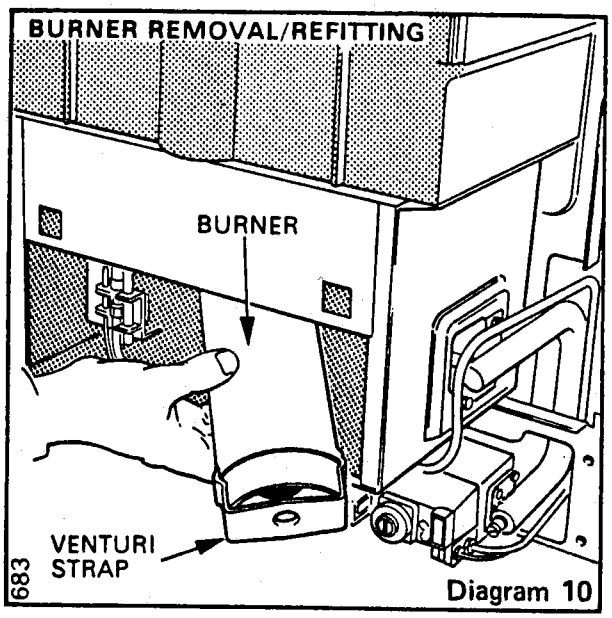

Diagram 10

5.13 Remove the combustion chamber shield from the packing.

5.14 Remove the burner from the packing, refer to diagram 10 and fit as follows:-

5.14.1 Offer burner into combustion chamber, first locating the venturi over the injector and then inclining the opposite end upward to allow the pin to clear the pilot bracket.

5.14.2 Lower the locating pin into the plunged hole in the pilot bracket, ensuring that it is seated correctly.

5.15 Fit combustion chamber shield.

5.16 Install the flue and seal to the flue hood in accordance with normal practices.

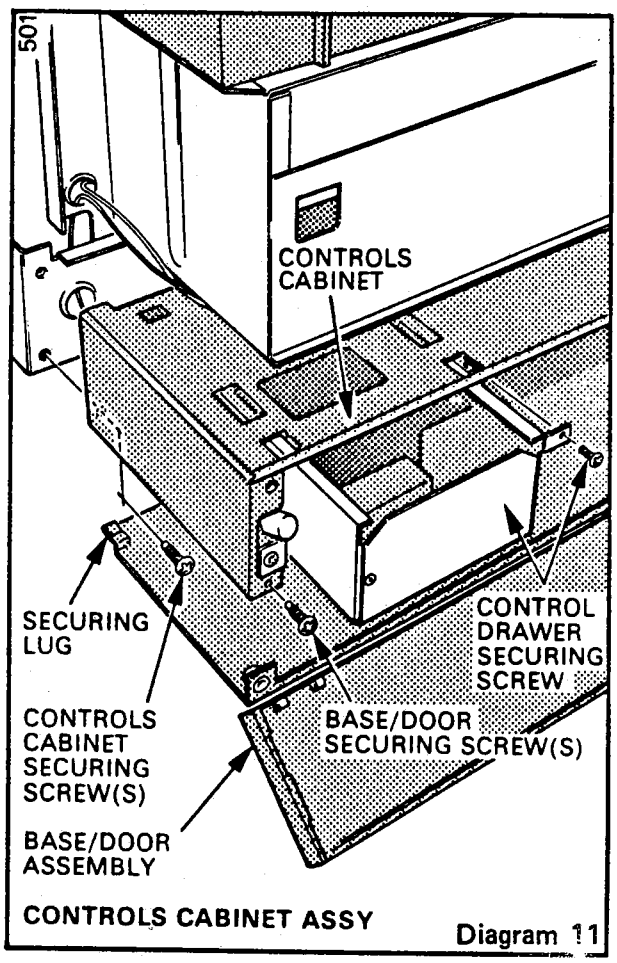

CONTROLS CABINET ASSY
Diagram 11

6 CONTROLS PACK

6.1 Open the controls pack - see 4.1 for list of contents. Remove the screws securing the base/door assembly of the controls cabinet, see diagram 11, remove the assembly and put in a safe place.

Remove the screw securing the controls drawer to the controls cabinet and completely remove the controls drawer. See diagram 12.

6.1.2 Screw the controls cabinet to the back panel, using the six screws provided, see diagram 11. Connect the loose end of the ignition lead to the Piezo Unit at the L.H. side of the controls cabinet.

6.2 Supporting the controls drawer, feed the thermostat phial through the large plunged hole in the bottom L.H. side of the back panel and through the hole in the L.H. support member. Engage the controls drawer on to its slides in the underside of the controls cabinet sufficiently to support the drawer. Fit the phial into the phial socket, pushing fully down and securing with the retaining split pin, supplied in the loose items bag.

6.2.1 Ensure that there is clearance between the thermostat capillary and the boiler.

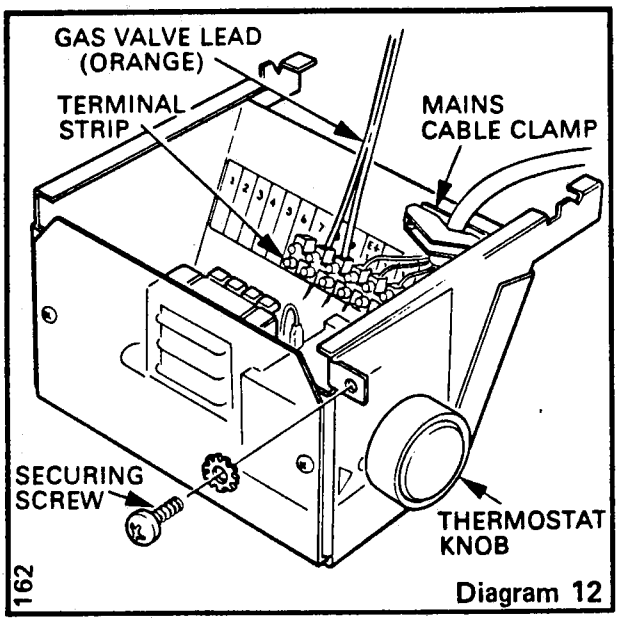

Diagram 12

7 CONTROLS PACK (BASIC) - WIRING

7.1 Feed the mains cable from the rear, through the large plunged hole in the bottom L.H. side of the main panel.

7.2 Pass the mains cable over the rear lip of the controls drawer and through the cable clamp, see diagram 12. Connect the three wires to the appropriate terminals in the terminal block and tighten the screws in the cable clamp, make the earth wire longer than the line and neutral wires.

7.3 In the event of an electrical fault after installation of the appliance, preliminary system checks must be carried out (i.e. earth, continuity, polarity and resistance to earth as described in the British Gas Multimeter Instruction Book).

7.4 Identify cable clip "S", diagram 14, taken from plastic bag. Fit to the front edge of hole above the gas valve, in the controls cabinet top.

7.5 Pass the orange gas valve lead through the large plunged hole in the back panel, across the back of the panel, in through the aperture at the right of the valve, via the cable clip and connect to the valve.

7.6 Push the controls drawer fully home and secure with the screw previously removed, making sure that the shakeproof washer is in place and that the screw is fully tightened.

7.7 Refit door/base assembly - a reverse of 6.1.

8 CONTROLS SCHEMES

THE INSTALLER IS REQUESTED TO ADVISE THE USER OF THE CONTROLS SCHEME USED WITH THIS BOILER AND TO GIVE GUIDANCE ON THE OPERATION OF THE CONTROLS.

These diagrams are schematic and for information only. The installation must comply with I.E.E. Wiring Regulations and all cable and connections must be of the approved type.

Scheme 1 Pumped hot water and heating, using one spring return valve, 10 position programmer.

Scheme 2 Honeywell Sundial Plan Y.
Follow Honeywell instructions for piping and controls installation.

Scheme 3 Independent control of hot water and heating, both pumped, using two spring return valves, 16 position programmer.

Scheme 4 Pumped hot water and heating, using a Drayton Flow-share valve.

Scheme 5 Satchwell Duoflow system, 16 position programmer. Remove links A and B from RJ2802 wiring centre.

Scheme 6 Independent control of hot water and heating, both pumped, using two motorised valves, 16 position programmer.

Scheme 7 Pumped hot water and heating, one motorised valve, 10 position programmer.

Scheme 8 Gravity hot water, pumped central heating ten position programmer.

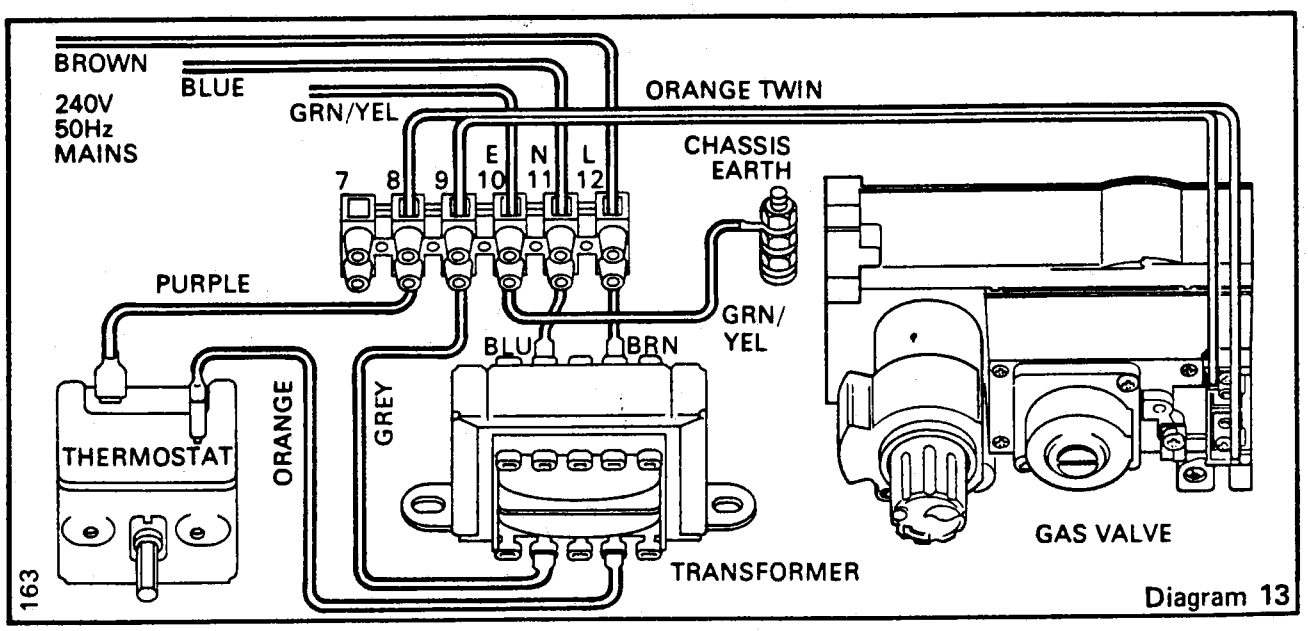

Diagram 13

8 CONTROLS SCHEMES

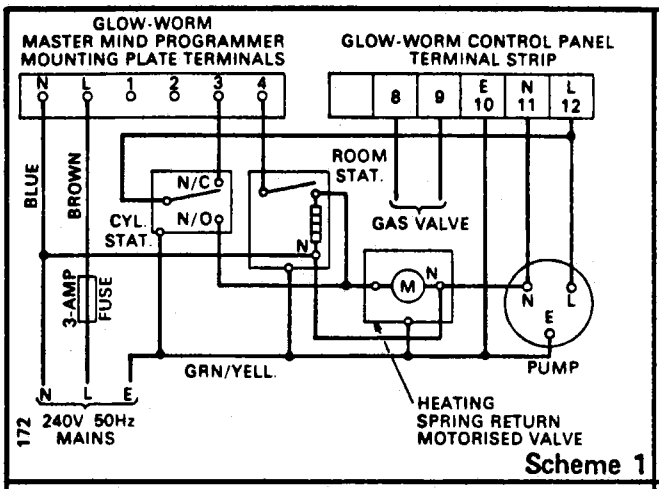

Scheme 1

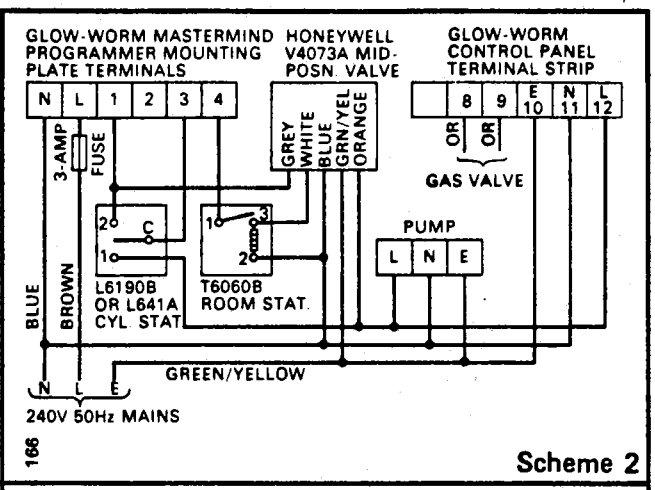

Scheme 2

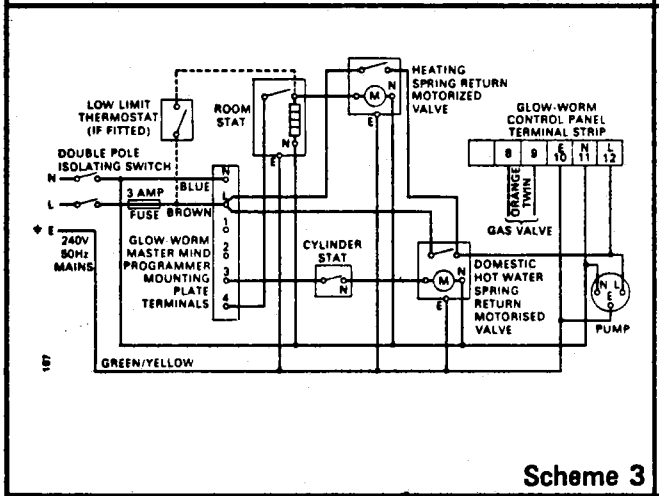

Scheme 3

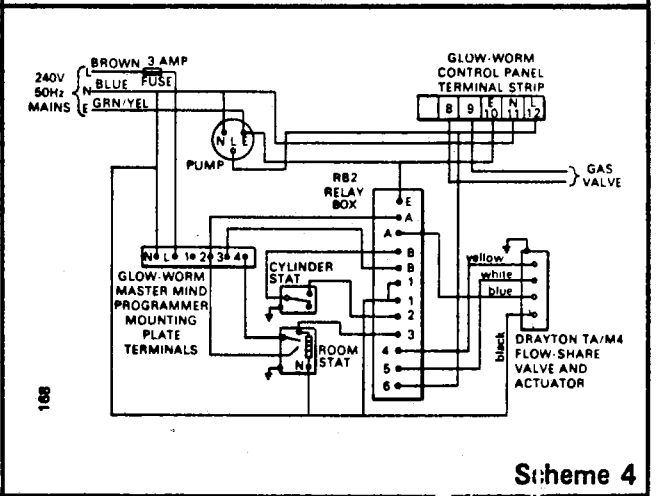

Scheme 4

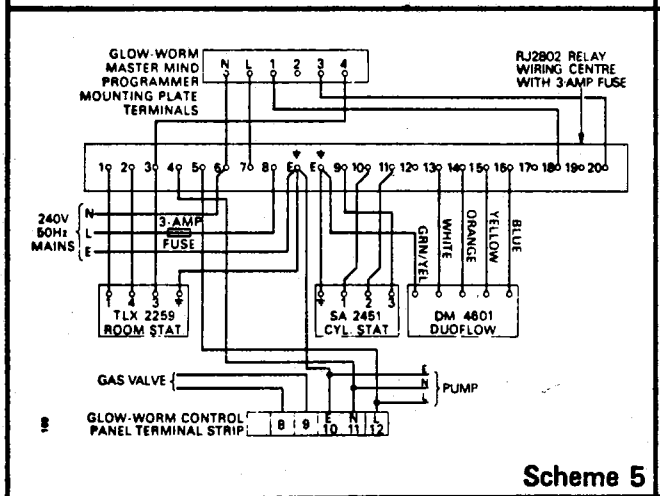

Scheme 5

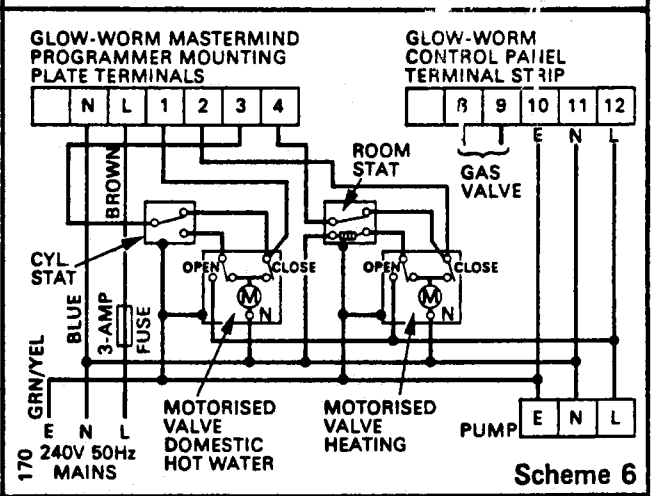

Scheme 6

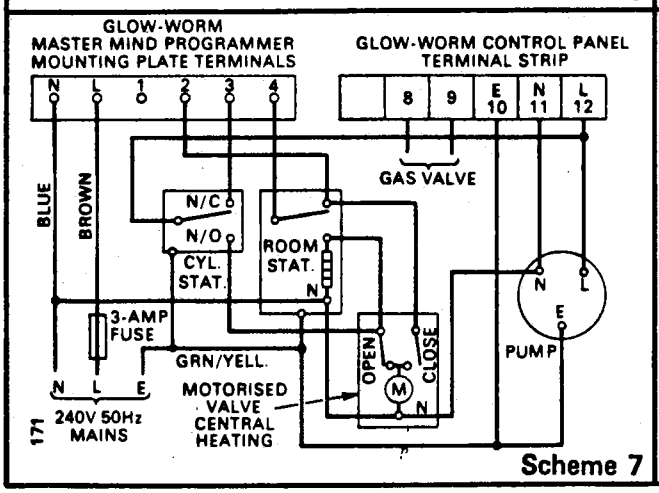

Scheme 7

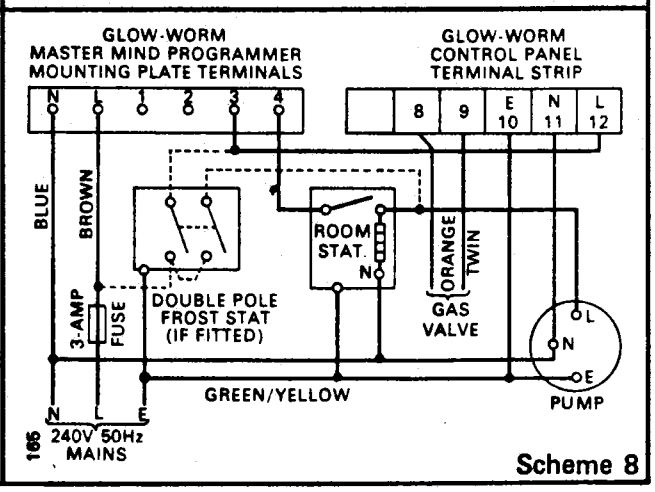

Scheme 8

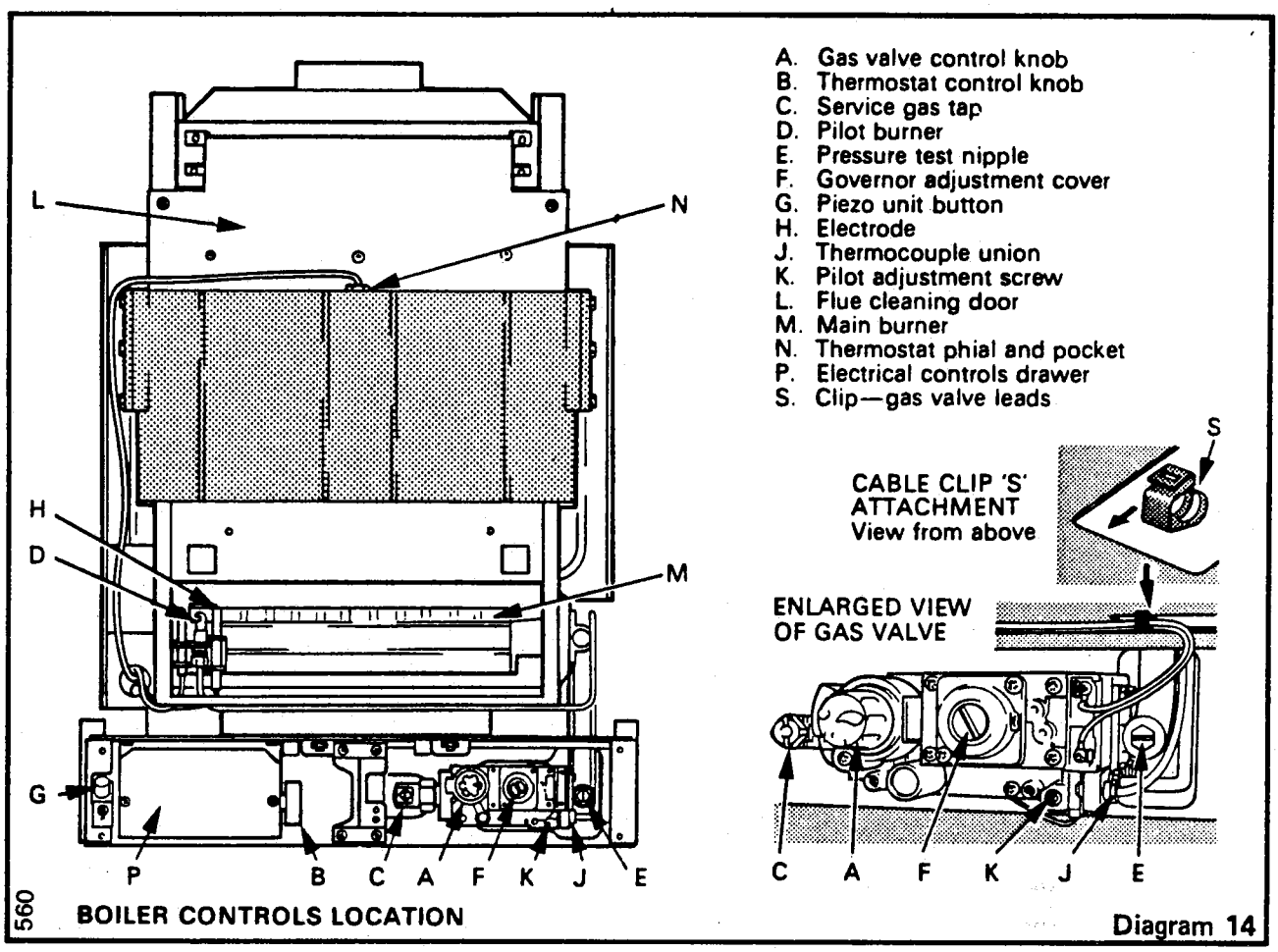

BOILER CONTROLS LOCATION

Diagram 14

9.1 ELECTRICAL INSTALLATION

Checks to ensure electrical safety should be carried out by a competent person.

9.2 GAS INSTALLATION

The whole of the gas installation should be tested for soundness and purged in accordance with the recommendations of CP331 Part 3.

9.3 WATER CIRCULATION SYSTEM

The whole of the system should be thoroughly flushed out with cold water. Ensure that all valves are open. The system should then be filled with water and air locks cleared. Examine for water soundess.

9.4 INITIAL LIGHTING, TESTING & ADJUSTMENT

CAUTION: The following procedure should be carried out by a qualified gas service engineer. The pipes and fittings to the burner will contain an amount of air and it will be necessary to purge the air before the boiler can operate normally. Identify the boiler controls with relevant details on diagram 14.

9.4.1 Check that the service gas tap 'C' is closed, that is, the indicator line is vertical.

9.4.2 Make sure that the thermostat phial is positioned at the bottom of the phial pocket.

9.4.3 See that the mains electricity supply is switched off.

9.4.4 Set thermostat control knob 'B' to '0', the off position.

9.4.5 Remove gas pressure test nipple screw 'E' and connect a suitable pressure gauge.

9.4.6 Open service gas tap 'C'.

9.4.7 Depress gas valve control knob 'A' fully and hold. Depress and release the piezo unit button 'G' until the pilot burner lights. At this stage, air may be present in the gas pipes and this operation may need to be repeated until all the air has been expelled. When the pilot burner lights keep control knob 'A' fully pushed in for approx. 20 seconds to heat the thermocouple. If the pilot burner fails to light or stay alight, wait THREE MINUTES then repeat exactly the above sequence.

The pilot burner flame envelopes the thermocouple tip by 10 to 13mm, ($^3/_8$ to $^1/_2$ in).

The pilot gas rate can be adjusted if necessary as follows:- Identify pilot adjustment screw 'K' turn anti-clockwise to increase pilot flame.

9.4.8 If gas valve control knob 'A' is turned to the off position, '0', a safety lock prevents it being fully depressed again until the thermocouple has cooled, to prevent attempted re-light in a unsafe condition. No attempt should be made to depress knob 'A' until the three minutes have elapsed.

9.4.9 Make sure that the burner pilot is alight and stable, then switch electricity supply on. Set clock or programmer to an 'ON' position and ensure that any other controls are calling for heat. Set thermostat control knob 'B' between

'MIN' and 'MAX' opposite the marker on the control box; the main burner will then light. 'MAX' is approximately 82°C, (180°F).

9.4.10 Test for gas leakage around boiler gas components using leak detection fluid.

9.4.11 Set burner gas pressure after ten minutes from lighting (See page 2 for setting pressure). To do this, remove governor adjustment cover screw 'F' and adjust the internal screw to obtain the required pressure. Turn clockwise to increase pressure and anti-clockwise to decrease pressure. Replace the cover screw.

9.4.12 Check operation of the flame failure device as follows:- With the main burner alight, turn gas valve control knob 'A' clockwise to its stop, this will extinguish main and pilot flames. Relighting the boiler will not be possible as the safety device in the gas valve has been activated. Before 60 seconds have elapsed the flame failure device should have closed, (a click from the gas valve will indicate its operation). Do not attempt to relight until 3 minutes have elapsed. Remove the pressure gauge and refit the pressure test screw 'E'.

9.4.13 Turn thermostat 'B' to '0' then relight the boiler pilot burner as in 9.4.7.

9.4.14 Light the main burner and check for gas leakage around pressure test screw 'E'.

9.4.15 Check that the boiler thermostat and all automatic controls are operating satisfactorily.

9.4.16 Test the boiler for spillage of flue products at the draught diverter as detailed in BS5440 Part 1, appendix B. If an extraction fan is fitted in the premises, refer to section 3.4 'Extraction Fans'.

9.4.17 Allow the water system to warm up and then set the pump adjuster to a design position which gives the correct temperature difference of 11°C, (20°F), between the flow and return. There should be no undue noise in the pipework or emitters and no pumping over of system water at the vent.

9.4.18 Allow the water system to reach maximum working temperature and examine for water soundness. The system should then be turned off and rapidly drained while still hot to complete the flushing process. The system should again be filled with water and cleared of air locks. Examine for water soundness.

9.5 COMPLETION

9.5.1 Fit the casing by offering up squarely and vertically to the boiler, ensuring that the lower part of the casing clears the pilot tube. Lift approximately 10mm so that the hanging brackets on the rear of the casing locate in the slots provided, see diagram 15. The casing can now be secured with the two M5 screws at the positions indicated in diagram 16.

IMPORTANT NOTICE: ENSURE THAT NOTHING OBSTRUCTS THE GRILLE AT THE TOP OF THE BOILER CASING.

9.5.2 If required, fit the rear side panels by engaging the rear lugs on to the slots on the casing bracket and lower part of main panel, see diagram 15.

9.6 USER INSTRUCTIONS

Hand the User Instructions to the user or purchaser for retention then instruct in the efficient and safe operation of the boiler and heating/hot water system. Advise the user or purchaser that for continued efficient and safe operation of the boiler it is important that adequate servicing is carried out at intervals recommended by the local region of British Gas plc.

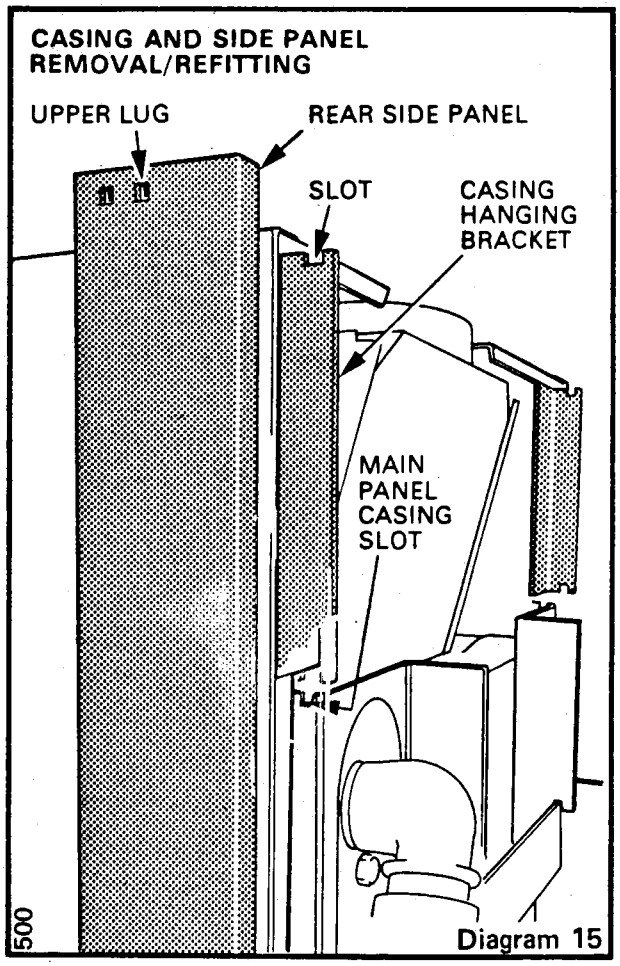

Diagram 15

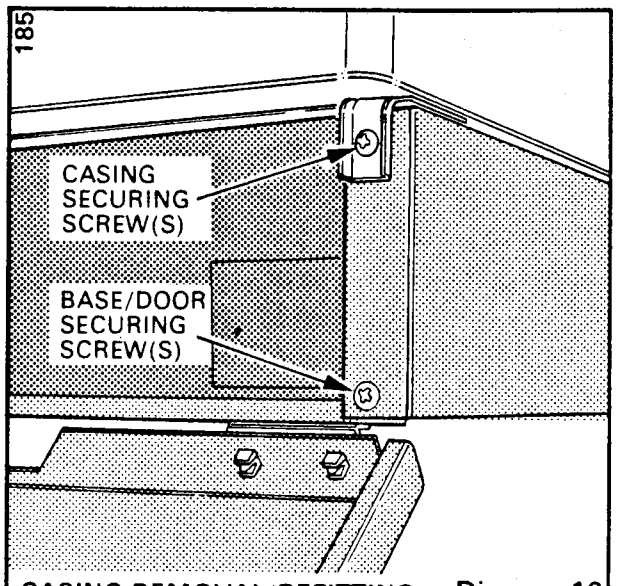

CASING REMOVAL/REFITTING Diagram 16

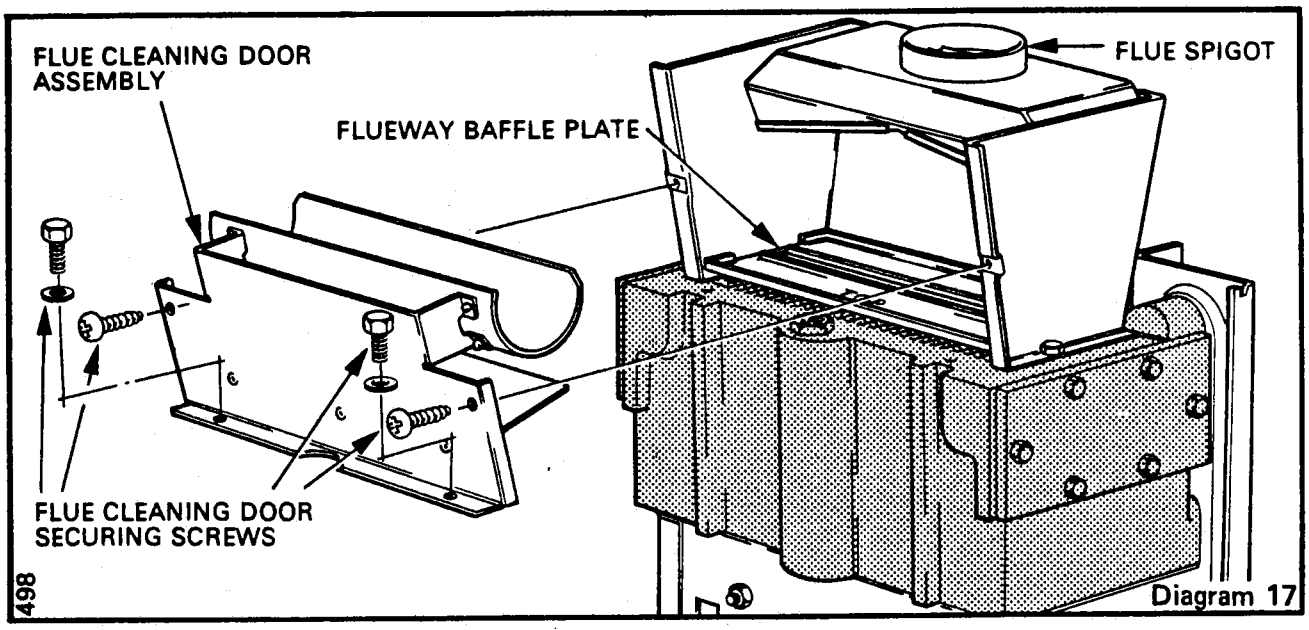

Diagram 17

10 SERVICING

Servicing must be carried out by a qualified gas service engineer and where appropriate, a qualified electrician.

BEFORE COMMENCING A SERVICE, TURN OFF THE GAS SUPPLY AT THE MAIN SERVICE COCK AND ISOLATE THE ELECTRICITY SUPPLY TO THE APPLIANCE.

10.1 BOILER FLUEWAYS

10.1.1 Remove rear side panels, if fitted, by lifting to disengage the lugs from the slots, see diagram 15.

10.1.2 To remove the outer casing, undo the two screws which secure it to the control cabinet, see diagram 16. Then lift the casing approximately 10mm to clear its support slots and withdraw.

10.1.3 Remove the four screws which retain the flue cleaning door assembly and lift it clear (see diagram 17).

10.1.4 Remove the combustion chamber shield, see diagram 18, by lifting slightly to clear the lugs and withdraw. Remove the burner by lifting the L.H. and so that the location pin clears its seating, then move to the left so that the R.H. end clears the injector. Withdraw the R.H. end first from the combustion chamber, taking care not to damage the electrode or pilot burner.

10.1.5 Place a sheet of paper in the combustion chamber, over the pilot burner to catch the flue debris.

10.1.6 Lift out the flueway baffle plate to expose the boiler flueways and fins. The boiler flueways and fins should now be cleaned thoroughly with a suitable stiff brush.

10.1.7 Replace burner as in 5.14, flueway baffle as in 5.10, flue cleaning door assembly and combustion chamber shield.

10.2 BURNER

With the burner removed as above, clean thoroughly.

10.2.1 Turn the injector end plate in an anti-clockwise direction to release, then remove, complete with venturi tube.

10.2.2 Clean all dust and lint from inside the burner with a vacuum cleaner. Remove any dust etc. from the burner top.

10.2.3 Replace venturi/end plate in reverse order to that described in 10.2.1, then replace burner and combustion chamber shield.

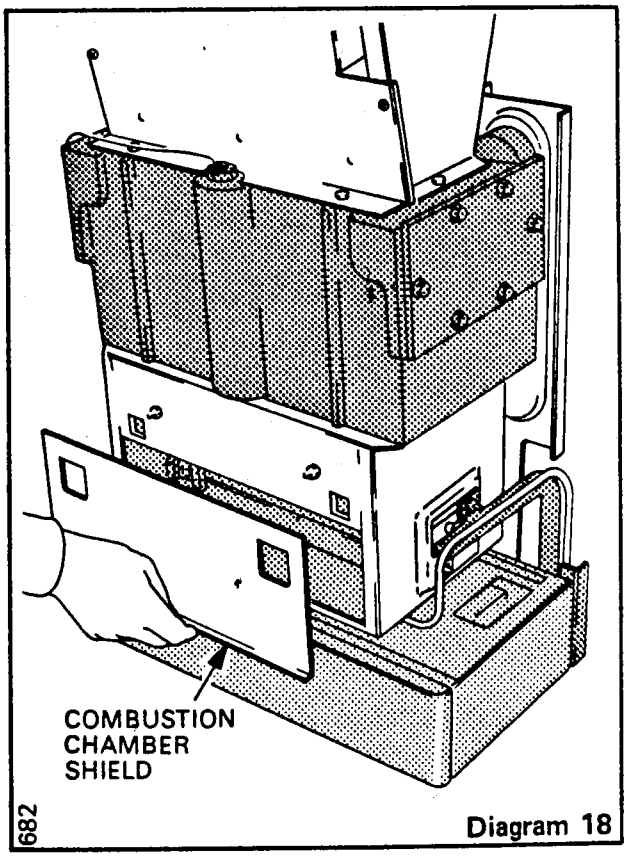

Diagram 18

11 REPLACEMENT OF PARTS

BEFORE REMOVING OR REPLACING ANY PARTS, TURN OFF THE GAS SUPPLY AT THE BOILER, SERVICE TAP 'C', DIAGRAM 14 AND ISOLATE THE ELECTRICITY SUPPLY TO THE APPLIANCE.

Note

11.1 Remove controls base/door assembly by removing the two screws, see diagram 16.

Note

11.2 Remove the rear side panels, if fitted, and casing, see text 10.1.1 and 10.1.2.

Note

11.3 Remove the rear side panels, if fitted, casing and burner, see text 10.1.1, 10.1.2 and 10.1.4.

Note

11.4 All items are replaced in reverse order, except where noted.

11.5 GAS VALVE (See note 11.1)

11.5.1 Disconnect the orange electrical leads, thermocouple nut and pilot tube connections at the gas valve, see diagram 19.

11.5.2 Undo the union nut at the gas cock at L.H. side of the gas valve.

11.5.3 Undo the four screws securing the gas valve to the flange fitting on the burner supply tube at R.H. side. Take care not to damage the 'O'ring seal, should any damage occur then a new 'O' ring, Item No. 2 on the list of replacement parts must be fitted. The gas valve is now free and can be removed.

11.5.4 When screwing the union half fitting into the replacement valve, use a little jointing compound on the threads to ensure a gas-tight seal.

11.5.5 Re-assemble in reverse order to that described, carefully re-fitting the 'O' ring in the valve recess. Do not tighten thermocouple nut more than one quarter turn beyond finger tight, making sure that the connector lead is fitted onto the slot in the valve, see diagram 19. It will be necessary to purge the system of air after changing the gas valve and re-lighting should be carried out as in 9.4 INITIAL LIGHTING AND ADJUSTMENT.

11.6 INJECTOR (See note 11.3)

11.6.1 When the burner is removed, as in 10.1.4 the injector can be seen at the R.H. side of the combustion chamber. It can be unscrewed and replaced as necessary. When replacing, use a little jointing compound on the threads to ensure gas soundness.

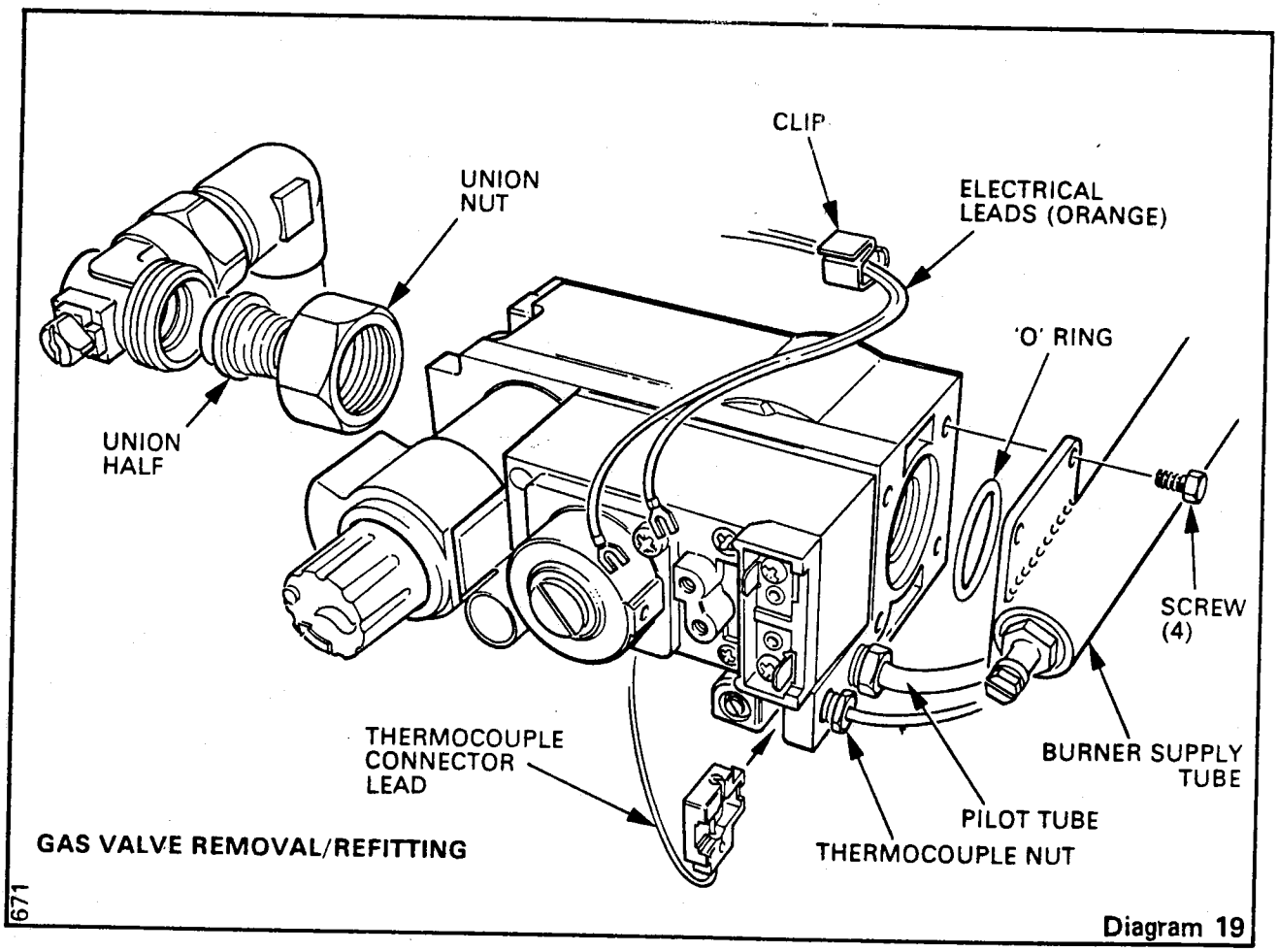

GAS VALVE REMOVAL/REFITTING

Diagram 19

11.7 PILOT BURNER (See note 11.2)

11.7.1 Remove the pilot shield from the combustion chamber side by removing the securing screw, nut and washer, see diagram 20.

11.7.2 Pull out the clip holding the thermocouple into the pilot burner and pull the thermocouple downwards out of the pilot burner.

11.7.3 Disconnect the lead from the electrode and remove the nut from the stud securing the electrode to the pilot bracket then remove the electrode.

11.7.4 Disconnect the pilot union at the base of the burner using two spanners, one on the union nut and the other on the hexagon immediately above the union nut.

11.7.5 Slacken the nut securing the pilot burner at the left. The pilot burner can now be removed.

11.7.6 Check the spark gap, see diagram 21.

11.7.7 Make sure that the pilot flame envelops the thermocouple tip by 10 to 13mm, ($^3/_8$ to $^1/_2$ in.). Flame length approximately 13mm, ($^1/_2$ in.).

11.8 THERMOCOUPLE (See notes 11.1 and 11.2)

11.8.1 Remove the pilot shield as in 11.7.1.

11.8.2 The thermocouple can be released after removing the clip securing it to the pilot and pulling it downward.

11.8.3 Disconnect from the gas valve by unscrewing nut, see diagram 19. The thermocouple can now be withdrawn.

11.8.4 To refit the thermocouple, feed the gas valve end downwards through the cut-out in the combustion chamber base, below the pilot burner then via the hole in the left support member, down the back of the main panel, to come through the aperture at the right of the valve and connect at the valve, making sure that the connector lead is fitted into the slot in the valve, see diagram 19. Do not tighten this more than one quarter turn beyond finger tight.

11.8.5 Connect the other end of the thermocouple to the pilot burner and secure with the clip.

11.9 ELECTRODE (See note 11.2)

11.9.1 Remove the pilot shield as in 11.7.1.

11.9.2 Disconnect the lead from the electrode and remove the hex. nut from the stud securing the electrode to the pilot bracket then remove the electrode complete with its bracket.

11.9.3 Replace by reversing the above procedure and ensure that the electrode is correctly positioned, see diagram 20.

11.10 ELECTRICAL CONTROL DRAWER (See notes 11.1 and 11.2)

11.10.1 Remove control drawer securing screw, see diagram 12.

11.10.2 Remove the retaining split pin and remove the thermostat phial from the pocket.

11.10.3 Remove the orange gas valve lead from its clip above the valve.

11.10.4 Slide the control drawer forwards far enough to disconnect all electrical leads. The drawer can then be removed, withdrawing the thermostat capillary through the main panel.

11.10.5 Replace in reverse order, for details or wiring see diagram 13. Ensure that the thermostat phial is secured in the pocket by the retaining split pin. Leave clearance between capillary and boiler.

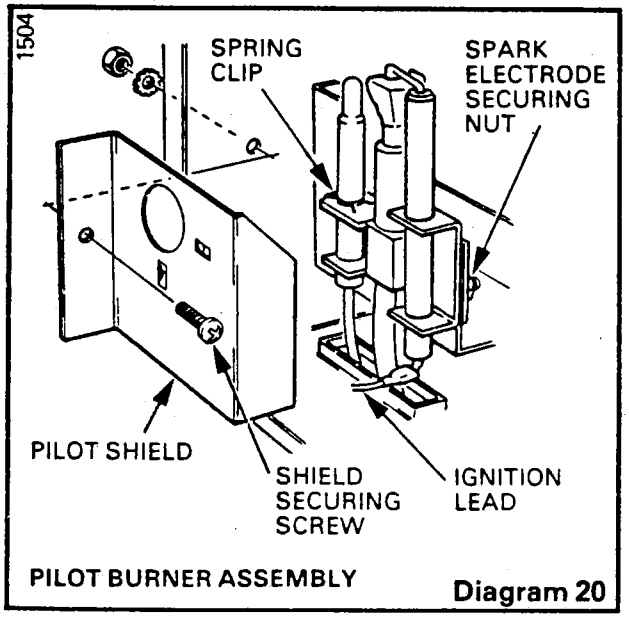

PILOT BURNER ASSEMBLY

Diagram 20

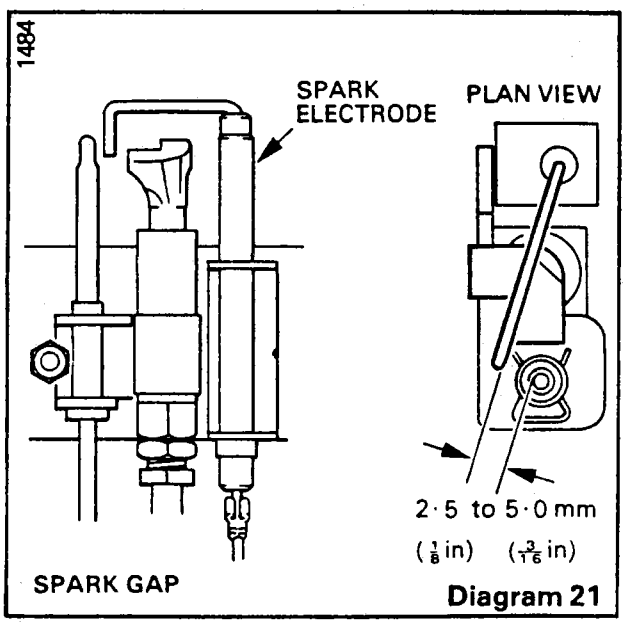

SPARK GAP

Diagram 21

11.11 BOILER THERMOSTAT (See notes 11.1 and 11.2)

11.11.1 Remove control drawer as in 11.10, pull off thermostat control knob.

11.11.2 Slacken the screw securing the thermostat capillary clip to the control drawer and release the capillary.

11.11.3 Disconnect the two connectors on top of the thermostat. Remove the two screws securing the thermostat to the control drawer. Remove the two screws and front cover of the controls drawer. The thermostat may now be removed.

11.11.4 Replace in reverse order, making sure that the connectors on the thermostat are at the top. Leave clearance between capillary and boiler. Ensure that the thermostat phial is pushed fully down to the bottom of its pocket and secured with the retaining split pin.

11.12 PIEZO UNIT

11.12.1 Open controls door and remove the control drawer securing screw, see diagram 12. Pull the control drawer forward on its slide.

11.12.2 Pull off ignition lead from the tag on the piezo unit.

11.12.3 The piezo unit can now be removed by undoing the screw securing it to the front of the controls cabinet.

11.13 IGNITION LEAD (See note 11.2)

11.13.1 Remove combustion chamber shield by lifting slightly to clear the lugs, then withdraw, see diagram 18.

11.13.2 See 11.12.1 and 11.12.2.

11.13.3 Pull off tag connections at bottom of electrode, The lead can then be removed, threading it through the holes in the left back panel and combustion chamber base.

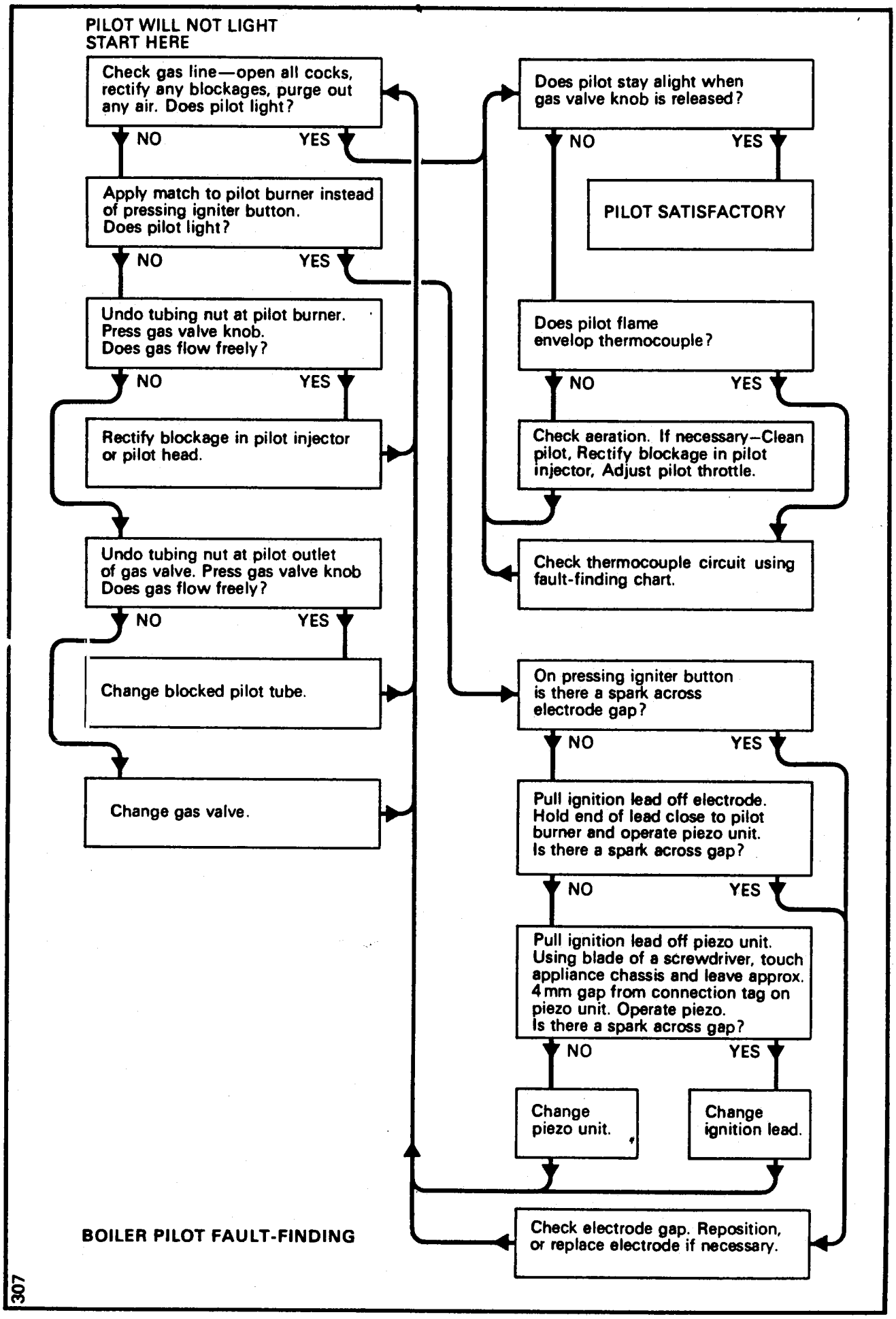
PILOT WILL NOT LIGHT
START HERE
Check gas line—open all cocks, rectify any blockages, purge out any air. Does pilot light?
NO
YES
Apply match to pilot burner instead of pressing igniter button. Does pilot light?
NO
YES
Undo tubing nut at pilot burner. Press gas valve knob. Does gas flow freely?
NO
YES
Rectify blockage in pilot injector or pilot head.
Undo tubing nut at pilot outlet of gas valve. Press gas valve knob Does gas flow freely?
NO
YES
Change blocked pilot tube.
Change gas valve.
Does pilot stay alight when gas valve knob is released?
NO
YES
PILOT SATISFACTORY
Does pilot flame envelop thermocouple?
NO
YES
Check aeration. If necessary–Clean pilot, Rectify blockage in pilot injector, Adjust pilot throttle.
Check thermocouple circuit using fault-finding chart.
On pressing igniter button is there a spark across electrode gap?
NO
YES
Pull ignition lead off electrode. Hold end of lead close to pilot burner and operate piezo unit. Is there a spark across gap?
NO
YES
Pull ignition lead off piezo unit. Using blade of a screwdriver, touch appliance chassis and leave approx. 4 mm gap from connection tag on piezo unit. Operate piezo. Is there a spark across gap?
NO
YES
Change piezo unit.
Change ignition lead.
Check electrode gap. Reposition, or replace electrode if necessary.
BOILER PILOT FAULT-FINDING
307

12 FAULT FINDING CHART

12.1 To test the thermocouple a meter with a range of 0 - 30 mV is required together with a thermocouple interruptor test unit similar to the B.G.C. (Minitest 6) Multimeter and interruptor.

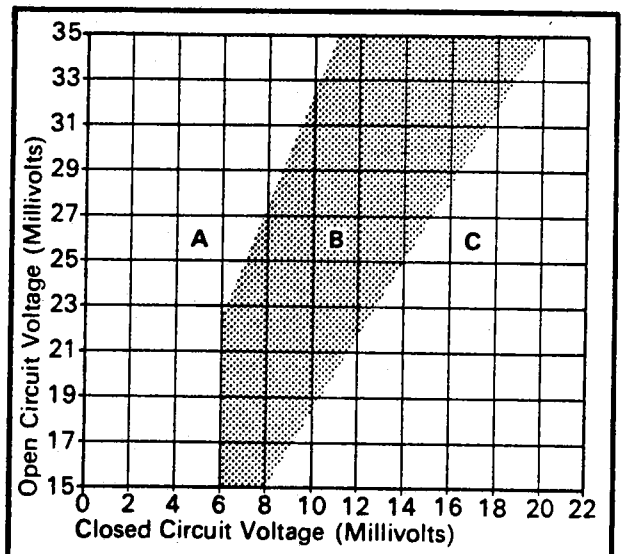

308 **DIAGNOSIS GRAPH FOR BOILER THERMOCOUPLE CIRCUIT**

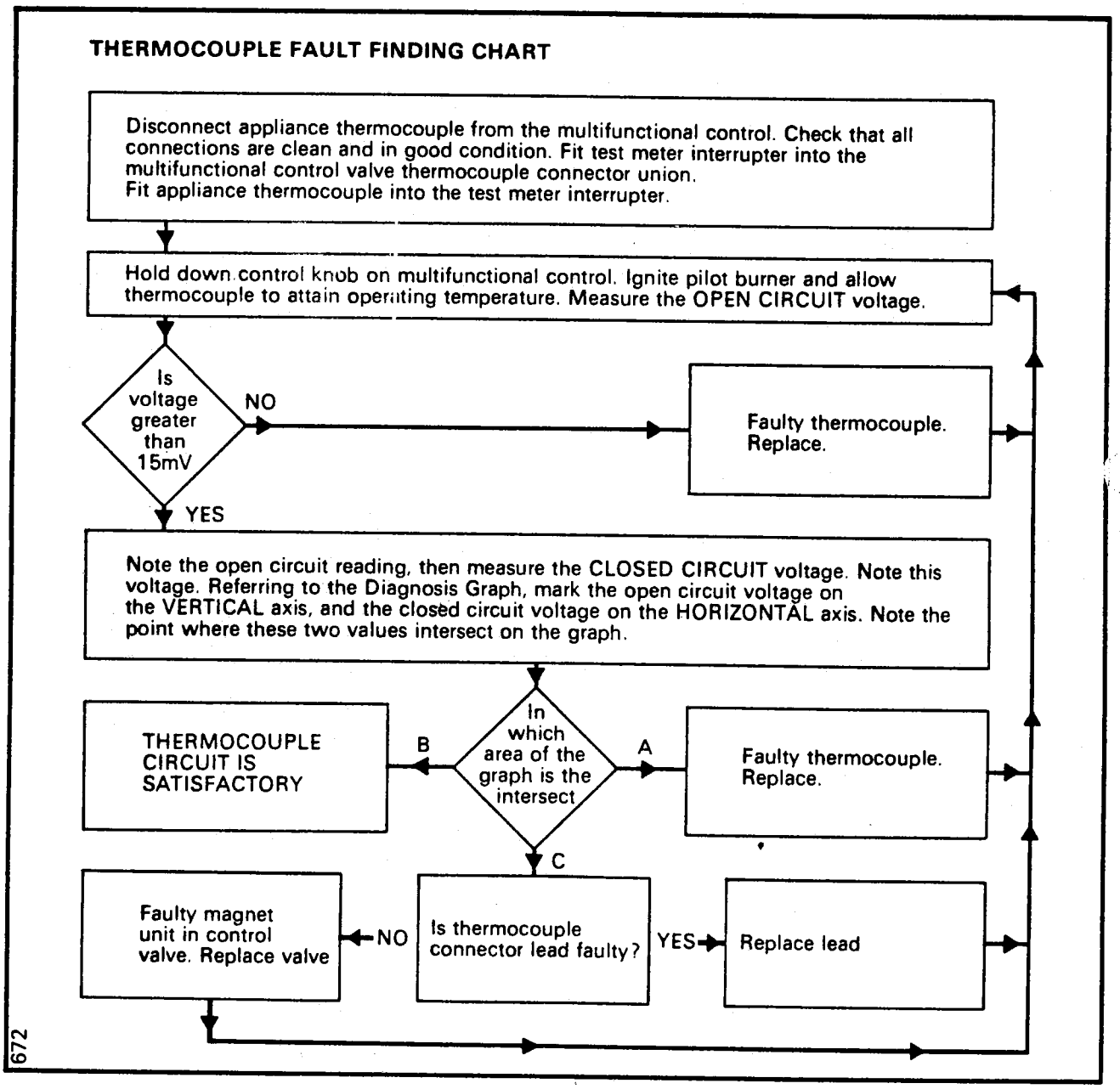

12.2 Electrical fault finding. Refer to wiring diagram 13 and diagram 22 when using the chart below.

12.2.1 IMPORTANT:- The preliminary electrical system checks as contained in the British Gas Multimeter Instructions book are the first checks to be carried out during a fault-finding procedure. On completion of the service fault-finding task which has required the breaking and re-making of electrical connections then the checks 'A' Earth continuity, 'C' Polarity, 'D' Resistance to Earth must be repeated.

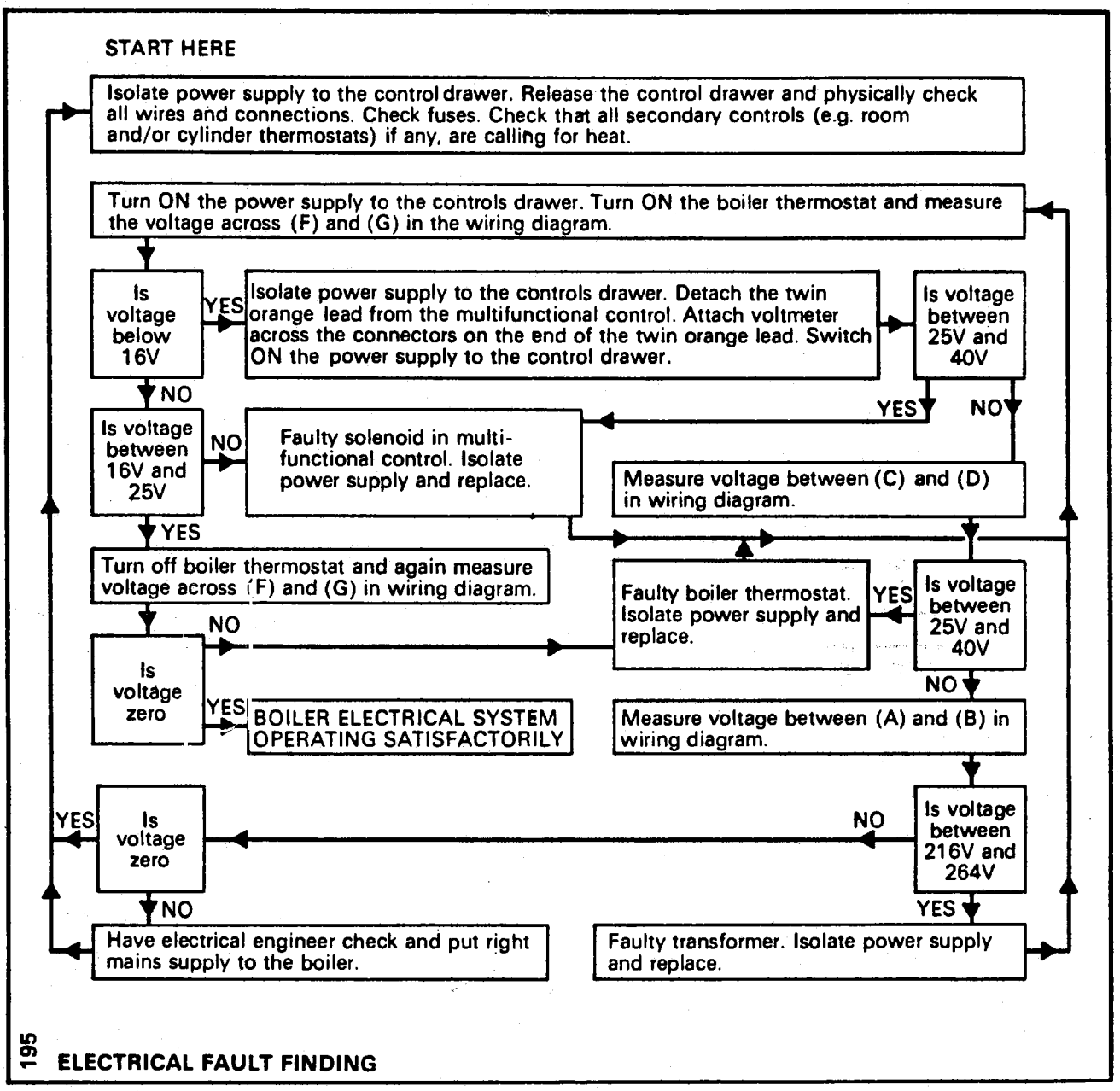

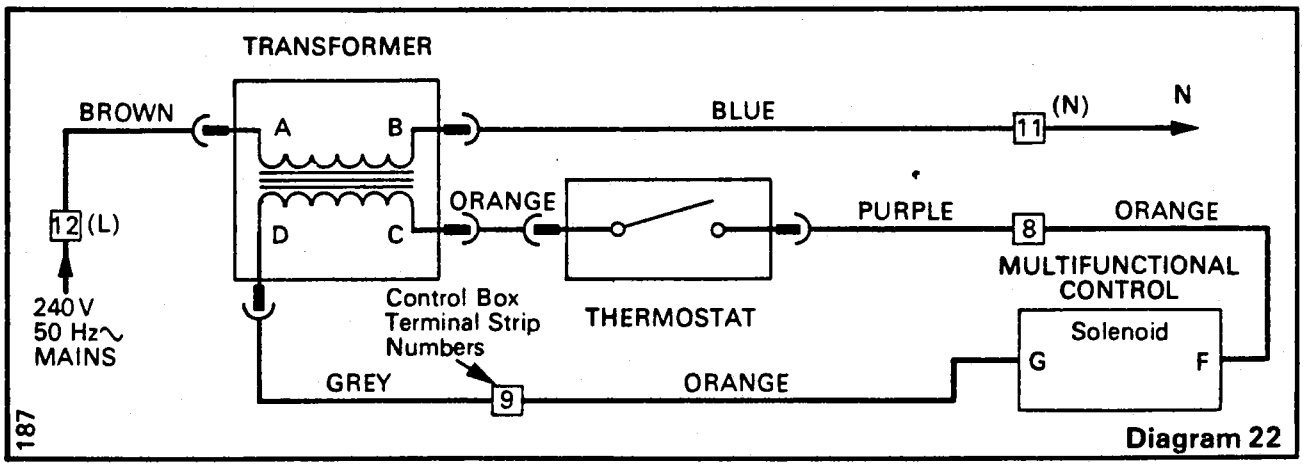

13 REPLACEMENT PARTS

Key No.	G.C. Part No.	Glow-worm Part No.	Description
1	392 693	203310	Gas valve, Honeywell - R½
2	334 658	208068	'O' Ring
3	351 978	K8277	Injector 3.8mm
4	390 894	K2674	Thermocouple - Maclaren
5	390 983	K3580	Clip for thermocouple
6	-	203416	Pilot Burner - Johnson
7	381 734	202609	Spark electrode
7	381 733	202610	Spark electrode
8	-	WW5101	Ignition lead
9	-	409750	Electrical control Drawer - Basic
11	-	202503	Thermostat - Ranco
13	351 828	FF2228	Control knob assembly - thermostat
14	387 907	K6587	Piezo unit - Kigass } Alternatives
14	393 563	K6587	Piezo unit - Vernitron } Alternatives
15	355 153	411194	Sight Window
16	334 659	202403	Thermocouple connector lead

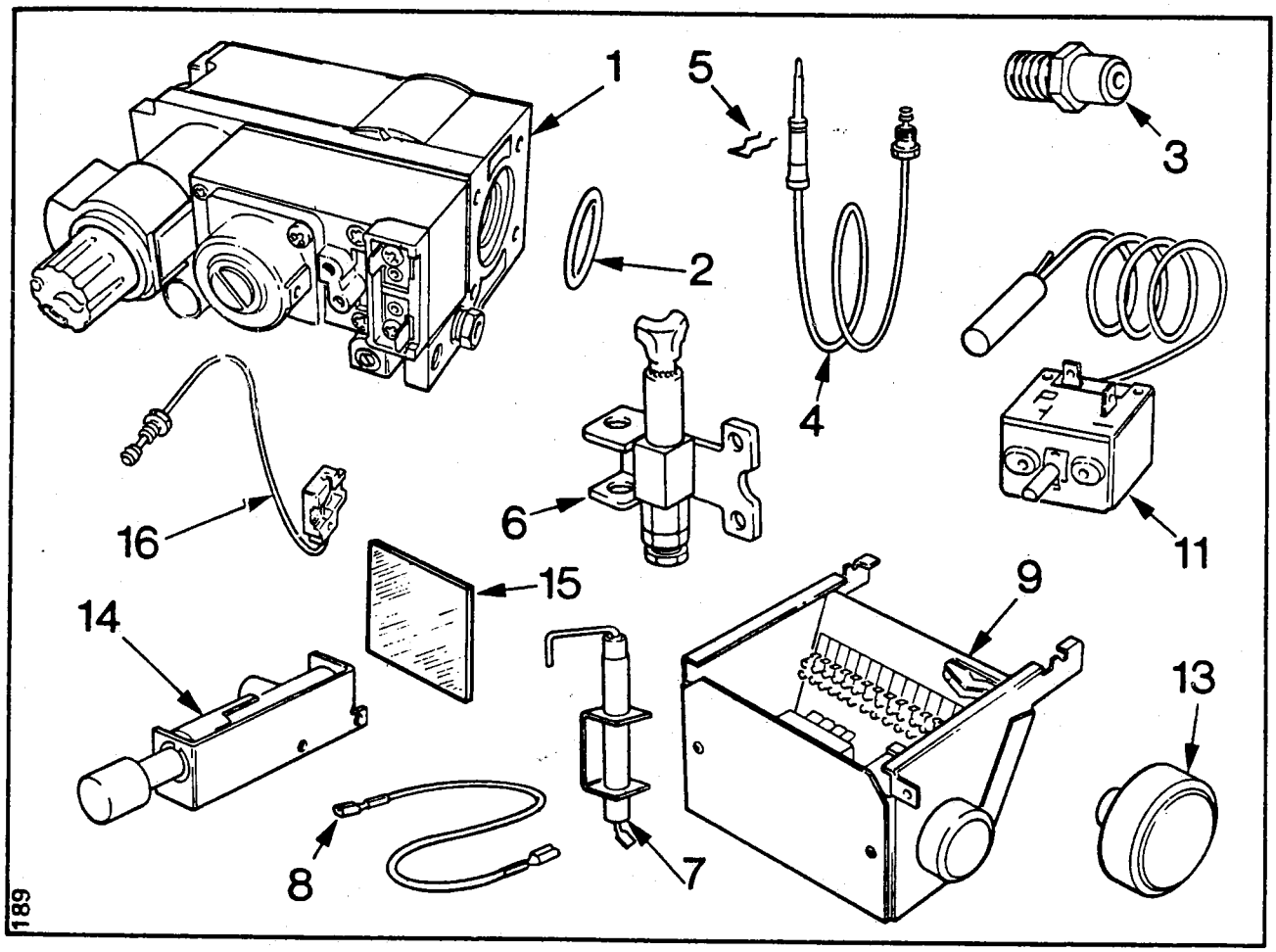

If replacement parts are required, apply to your local supplier. Please quote the name Space Saver 60 Mk II and the serial number from the data badge, which can be found on the lower left of the main panel.

Because of our constant endeavour for improvement, details may vary slightly from those quoted in these instructions.

DG Disc 1/78

Glow-worm Ltd
Nottingham Road, Belper, Derby DE5 1JT
Telephone Belper (077 382) 4141
Telex 37586

719